JOMINY TEST

Design & Manufacturing Plan of a Jominy Testing Device

HAMK
UNIVERSITY OF APPLIED SCIENCES

Bachelor's thesis

Mechanical Engineering & Production technology

Riihimäki 2012

James Alison Orivri

HAMK
UNIVERSITY OF APPLIED SCIENCES

ABSTRACT

Unit
Name of degree programme
Option

Author James Alison Orivri **Year** 2012

Jominy Test Design & Manufacturing Plan of a Jominy Testing Device

ABSTRACT

The purpose of this work is to make one of the many heat treatments devices- Jominy end quenching testing machine of manufacturing processes. In the process, cases and related topics are going to be considered; necessary information to give the reader in-depth knowledge and understanding into the issue will be elaborated.

The idea of this project is to design a Jominy end quench testing machine which will be safe, ease to use, simple to understand, able to be managed by one person if needed, have a clear view of the heat treatment process while in operation, economic, have a low maintenance cost, durable, meets all CE standards and will be suitable for manufacturing. Materials for this thesis was sourced via several means including Finnish Standards Association SFS, world wide web, books and materials on heat treatments as well as one on one conversations with experts in this field. At the end of this project, the reader should have a good insight and understanding of the idea behind heat treatments and Jominy end quenching test.

A major part of this work involved the project drawings using 3D software of choice-Pro Engineer wildfire. This required a good knowledge of the programme and technical drawings as a manual of a step by step process to produce the said machine by means of the drawings in 2D and 3D formats will be made available. It should also be stated that while this is a project with customized dimensions, design and style, I examined some existing machines and considered their advantages, limitations and the simplest way to apply concepts which are cost efficient to my design.

Keywords Jominy test, design, temperature, hardenability, hardness, tempering.

Pages 28pp. + Appendices 8pp.

CONTENTS

1 INTRODUCTION 1

1.1 Heat treatments-the origin of jominy test 1
1.2 Why heat treatment and what can be heat treated 1
1.2.1 Softening 1
1.2.2 Hardening 2
1.2.3 Material Modification 2
1.3 Basic concept of heat treatment and the procedure 2
1.4 Types of heat treatment 4
1.4.1 Spheroidizing: 4
1.4.2 Normalising 4
1.4.3 Hardening (Quench hardening) 4
1.4.4 Austempering 5
1.4.5 Full annealing 5
1.4.6 Case, Surface hardening and Tempering 6
1.4.7 Tenifer treatment 6

2 JOMINY END QUENCHING TEST IN HEAT TREATMENTS 7

2.1 The concept of Jominy test 7
2.2 Connection of jominy test to real the world and working materials 7
2.3 Simulation and Practical based approach of jominy test in heat treatments 7
2.4 Hardenability In Jominy Test 8
2.5 Advantages & disadvantages of Jominy Test 10
2.6 Testing Procedure 10
2.7 Uses of hardenability values 13
2.8 Effects of alloying and microstructure 13
2.8.1 Carbon 14
2.8.2 Other alloying elements 15
2.8.3 Boron 15
2.9 Grain size 15
2.10 How to produce the result 16
2.10.1 Contourplots 16

3 DESIGN PLAN OF JOMINY TESTING MACHINE 18

3.1 Basic concept of the design 18
3.1.1 Design standardization 18
3.1.2 Why design a new machine & Problems of existing machine 18
3.1.3 Possible changes & why this was considered the better design over possible options 19

3.1.4 Features of the new design: 20
3.2 Parts drawing and design: 21
3.2.1 Welding drawing and design: 21
3.2.2 2-D Drawings: 22
3.2.3 Parts with high level of precision: 22
3.2.4 Assembly drawing and design: 24

4 MANUFACTURING OF JOMINY TESTING MACHINE POSSIBLE PLAN..... 25
1.1 Cost &Economic approach to design and manufacture 25
1.1.1 Safety & Maintenance of new manufactured machine..... 25
5 CONCLUSION 26
SOURCES 27

Appendix 1: 3D models of the proposed design

1 INTRODUCTION

1.1 Heat treatments-the origin of jominy test

Heat Treatment is the controlled heating and cooling of metals to alter their physical, chemical or mechanical properties without changing the product shape. Heat treatment is sometimes done inadvertently due to manufacturing processes that either heat or cool the metal such as welding or forming (Wikipedia, 2012).

The general purposes of a heat treatment are to improve the flexibility of soft tissues, remove toxic substance and to uniform the material composition and general quality of a metal piece. Jominy test is one of the techniques used to determine the outcome of a heat treatment method.

1.2 Why heat treatment and what can be heat treated

Heat treatment is often associated with increasing the strength of material, but it can also be used to alter certain manufacturing objectives such as improve machining, improve formability and restore ductility after a cold working operation. Thus it is a manufacturing process that can not only help other manufacturing process, but can also improve product performance by increasing strength or other desirable characteristics.
Steels are particularly suitable for heat treatment, since they respond well to heat treatment and the commercial use of steels exceeds that of any other material. Steels are heat treated for one of the following reasons:

1. Softening
2. Hardening
3. Material Modification.

1.2.1 Softening

Softening is done to reduce strength or hardness, remove residual stresses, improve toughness, restore ductility, refine grain size or change the electromagnetic properties of the steel restoring ductility or removing residual stresses is a necessary operation when a large amount of cold working is to be performed, such as in a cold-rolling operation or wiredrawing.

1.2.2 Hardening

Hardening of steels is done to increase the strength and wear properties. One of the pre-requisites for hardening is sufficient carbon and alloy content. If there is sufficient Carbon content then the steel can be directly hardened. Otherwise the surface of the part has to be Carbon enriched using some diffusion treatment hardening techniques.

1.2.3 Material Modification

Heat treatment is used to modify properties of materials in addition to hardening and softening. These processes modify the behaviour of the steels in a beneficial manner to maximize service life e.g., stress relieving, or strength properties example cryogenic treatment, or some other desirable properties like spring aging.

1.3 Basic concept of heat treatment and the procedure

Steels are iron-carbon alloys whose characteristics can be influenced by changing the chemical composition (C-content and by adding alloying elements) as well as through heat treatment. This means that there is a large number of constructional steels which fulfil all requirements. In order to understand the various heat treatments, it is necessary to be familiar with the processes which take place in constructional steel during heating and cooling.
The constitutional diagram iron-carbon forms the initial basis for heat treatment. It shows the microstructural constituents and amounts present in a condition of equilibrium. It can be seen from the constitutional diagram that austenite and, in hypereutectoid steels, austenite and cementite are present at temperatures above the GSK line. Very slow cooling leads to conditions of equilibrium at room temperature and causes the austenite to convert into other types of microstructure.

Steels with less than 0.8 % carbon content segregate ferrite out of the austenite during cooling and the remaining austenite disintegrates at under 723°C into perlite. With a carbon content of 0.8 %, perlite only forms as a mixture of ferrite and cementite. In steels with over 0.8 % carbon content, perlite and cementite form, whereby the secondary cementite is segregated out at the grain boundaries. By adding alloying elements, the transformation temperatures and lines of equilibrium can be changed and the formation of carbides influenced. (James Marrow, Manchester Materials Science Centre, UMIST, Manchester, UK , 2001)

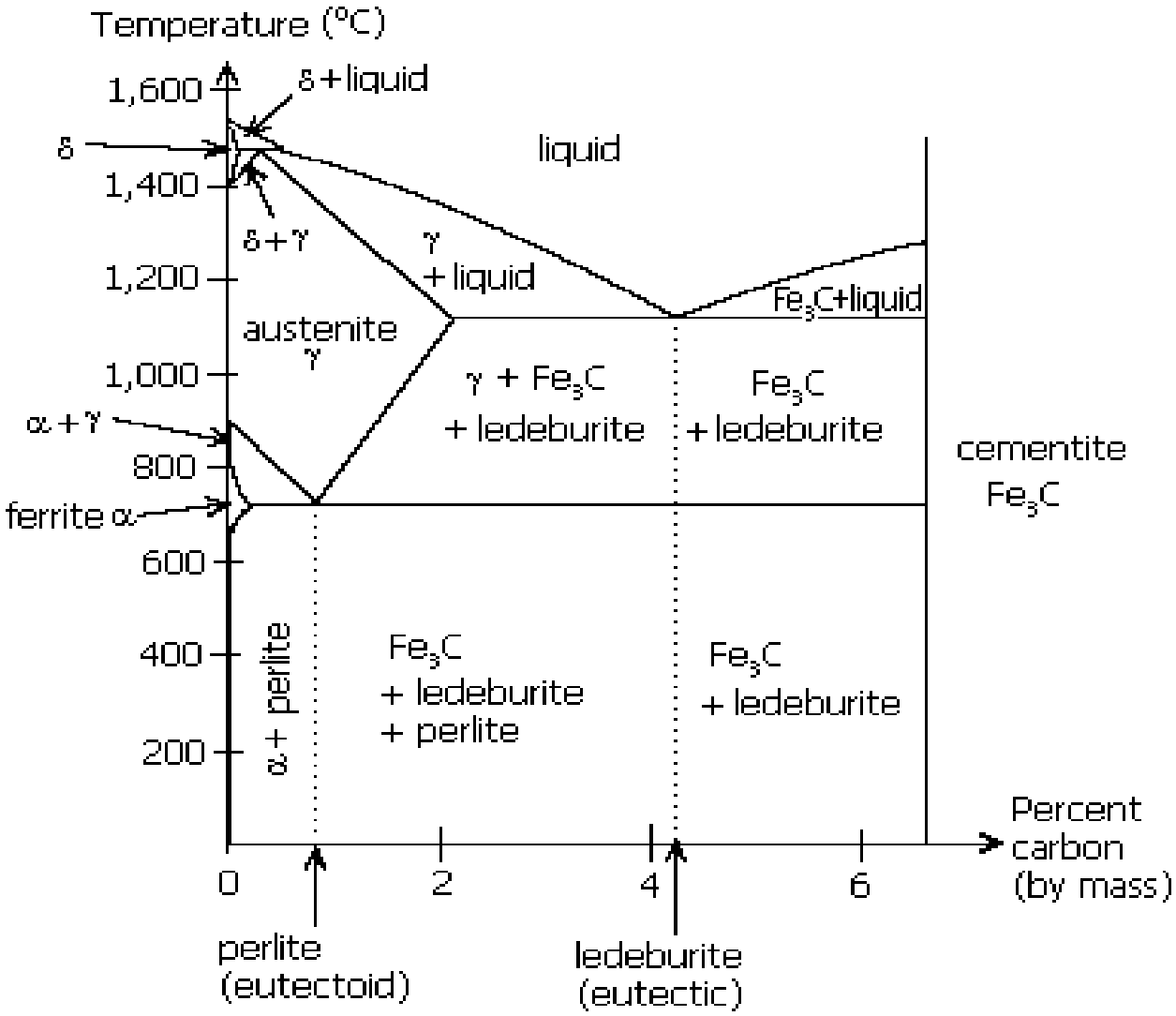

FIGURE 1 *Constitutional diagram iron-carbon*

1.4 Types of heat treatment

Heat treatment can be divided into two groups- superficial and deep. Superficial heat treatments apply heat to the outside of the body. Deep heat treatment directs heat toward specific inner tissues through ultrasound or by electric current. Heat treatments are beneficial prior to exercise, providing a warm-up effect to the soft tissues involved and the two groups are further divided into various types as listed below:

1.4.1 Spheroidizing:

Spheroidizing also called soft annealing, is carried out at a temperature of just under Ac1*, sometimes also over Ac1 or by fluctuating around Ac1 with subsequent slow cooling to achieve a soft condition.

Through this heat treatment, the cementite lamination of the perlite is transformed to a spherical form - known as granular cementite. This type of microstructure provides the best workability for steels with a C-content of more than approx. 0.5%. Granular cementite provides the condition for best workability for any type of cold working e.g. for cold-heading, drawing, or cold extrusion. (AG, 2011a.).

1.4.2 Normalising

When normalising, the steel is heated to a temperature (approx. 20°C to 50°C) above the upper transformation point Ac3*, for hypereutectoid steels above Ac1, and is then cooled in static air. It is used to achieve an even, fine-grained microstructure. The higher the heating and cooling speeds, the finer the grains in the microstructure become, providing that the transformation during cooling takes place in the perlite stage.

Through normalising, an uneven and coarse grained microstructure which has come about during hot forming can be eliminated. (Denis S., 1984), (Denis S., 1984)

1.4.3 Hardening (Quench hardening)

The term hardening is used to describe cooling from a temperature above the transformation points A3 or A1 at such a speed that on the surface or throughout, there is a significant increase in hardness, generally through the formation of martensite. The heating must be carried out to a temperature above the transformation points Ac1 or Ac3 and the cooling from a temperature above the transformation points Ac1 or Ac3.
The aim of the hardening is to achieve as high a level of hardness as possible in the work piece. The hardness reached depends on the carbon content of the steel and its hardenability whereby the dimensions of the work piece and conditions during heat

treatment also play a role. In order to carry out optimum hardening, it is necessary to adhere to the temperatures given and times for holding these as well as to correctly select and handle the hardening medium. The most suitable hardening values are to be achieved through hardening during the martensite phase.

The quenching media are usually water, oil or air, whereby the application depends on the critical cooling speed of the steel. In each case, the mildest quenching medium possible is used for each particular case, in order to keep the risk of tearing and distortion to a minimum.

- A1 point refers to the eutectoid transformation point (723°), where one solid transforms into two different solids.
- A3 point is the (a-g)-iron-transformation
- Ac1, Ac3 point is the arresting point on the heating curve at A1- a/o. A3- transformation (that is the temperature at which that transformation of ferrite to austenite is completed during heating).
- (c means chauffage, meaning heat)
- Ar1,Ar3 point refers to the arresting point on the cooling curve at A1- a/o. A3- transformation
- (r means refroidissement, meaning cooling) (AG, 2011a.).

1.4.4 Austempering

The term austempering is used to describe the quenching of a workpiece from the hardening temperature in salt and metal baths of a temperature lower than is required for the formation of perlite but higher than for the formation of martensite. This is maintained until the transformation to bainite has ended and there is subsequent cooling as desired to room temperature. Isothermal transformation into bainite of this type results in very low distortion levels and excellent toughness properties and tempering is not required. (AG, 2011a)

1.4.5 Full annealing

The term full annealing is used to describe annealing at a temperature above the upper transformation point Ac3 with cooling as required to suit the purpose and achieve a coarser grain.
As a result of the coarse grains, good workability is obtained, above all, in steels with a low carbon content and a highly ferritic-perlitic microstructure. This improvement is based on the fact that the work piece with coarse grains has a low degree of toughness meaning that a slightly brittle swarf occurs on it and this, in turn, leads to a reduction in wear when cutting (AG, 2011a.), (efunda, 2011) (Denis S., 1984).

1.4.6 Case, Surface hardening and Tempering

The term case hardening is used to describe hardening after previous carburization and, possibly, simultaneously increasing the nitrogen content of the surface.
It is used in cases where besides high core toughness, a work piece also needs to have a hard surface which is resistant to wear. Furthermore, through case hardening, the fatigue strength is increased at the edges due to inherent stresses. Steels used for this have low C contents and, depending on the desired core toughness, may be alloyed. For case hardening, depending on the material and shape and size of the work pieces, various types of treatment can be considered which in turn yields the desired result.

While surface hardening is used to describe heating of work pieces which are confined to the surface during which the core remains below the hardening temperature and is not hardened at all during quenching. This heating confined to the surface is achieved by gas flames (flame hardening) or inductive heating. As a result of these types of heating, under corresponding conditions, it is possible to achieve heating to hardening temperature throughout but then these types of heating can no longer be called surface hardening. Special types of surface hardening are case hardening and nitride hardening. Immediately after hardening, the parts are treated at approx. 200°C to relieve stresses.

Tempering on the other hand is used to describe heat treatment to achieve high levels of toughness with a particular tensile strength by hardening and subsequently annealing, normally at high temperatures. The mechanical properties of a tempered steel, in particular its toughness, depend to a large degree on the care taken during the tempering treatment. (Denis S., 1984)

1.4.7 Tenifer treatment

Tenifer treatment is a salt bath process especially developed from soft nitriding. As a nitrogen carrier, a KCN/KCNO salt bath with air cooling is used. The parts are treated at approximate 570°C for between 30 and 120 min. and are then cooled in water or air, depending on the material and shape.
(AG, 2011a. (Westmoreland Mechanical Testing & Research, 2012))

.

2 JOMINY END QUENCHING TEST IN HEAT TREATMENTS

2.1 The concept of Jominy test

The Jominy end-quench test is the measure of the hardenability of steel, which is a measure of the capacity of the steel to harden in depth under a given set of conditions. (Westmoreland Mechanical Testing & Research, 2012).

Knowledge about the hardenability of steels is necessary to select the appropriate combination of alloy steel and heat treatment to minimize thermal stresses and distortion in manufacturing components of different sizes. The Jominy end-quench test is the standard method for measuring the hardenability of steels. This describes the ability of the steel to be hardened in depth by quenching. Hardenability depends on the chemical composition of the steel and also be can affected by prior processing conditions, such as the austenitizing temperature. It not only is necessary to understand the basic information provided from the test, but also to understand how the information obtained from the Jominy test can be used to understand the effects of alloying in steels and the steel microstructure. (Industrial heating, 2012.).

2.2 Connection of jominy test to real the world and working materials

Heat treatment is an indispensable step in the manufacture of steel products, as mechanical properties such as hardness, static, and dynamic strength and toughness are selectively controlled by deliberate manipulation of the chemical and metallurgical structure of a component. However, apart from the desired effects, the heat treatment process can be accompanied by unwanted effects such as component distortion, high material hardness, low material strength, a lack of toughness which can lead to crack formation and inadequate hardness depth, which can lead to fatigue failure. Therefore, success or failure of heat treatment not only affects manufacturing costs but also determines product quality and reliability. Heat treatment must therefore be taken into account during development and design, and it has to be controlled in the manufacturing process. Part designers and heat treatment practitioners are looking for process feasibility, a specific microstructure fitting to the in-service requirements, minimum part distortion, and proper distribution of residual stresses.

Due to this pending need, jominy test in introduced to cub these issues.

2.3 Simulation and Practical based approach of jominy test in heat treatments

Jominy test of heat treatments can be achieved in two ways- the simulation based design or the practical approach. Information will give in details on the practical approach as that is the idea behind this project, however is expedient to shed some light on the simulation based design approach. SYSWELD is one of the tools possible for such approach.

It is finite element software which permits for not only jominy tests to be carried out but all other heat treatment processes to be achieved taking all significant physical effects into account. Thus, the part designer/heat treatment practitioner can have a deliberate influence on minimizing manufacturing costs and optimizing product reliability and quality. The Jominy test is implemented as a predefined, ready-to-run simulation project in SYSWELD. The user defines the chemical composition of the steel, and the computation of the Jominy test is done automatically.

With the aid of SYSWELD heat treatments processes on actual parts is done and it provide answers to these basic questions:

- Is the selected heat treatment process feasible?
- Is the selected steel feasible?
- Is the selected quenching media suitable?
- Is the process window safe against process tolerances?
- Is the part hard where it should be hard?
- Is there any crack risk occurring during the process?
- Are the obtained distortions acceptable?
- Are the residual compressive stresses high enough and well positioned?

(Wojciech Sitek, April, 2008), (Harald Porzner, 2008)

2.4 Hardenability In Jominy Test

The aim of jominy test is to ensure that the right hardenability is achieved as already stated or to have a record of the current hardenability data. So without success being achieved here in, a good success will not have being achieved to some degree. Below are two insightful diagrams which we shall discuss more on shortly.

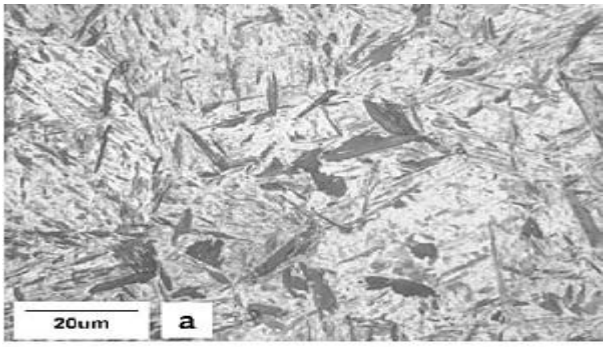

FIGURE 2
Above: quench test of a 0.4wt% carbon steel:
(a) Untempered martensite;

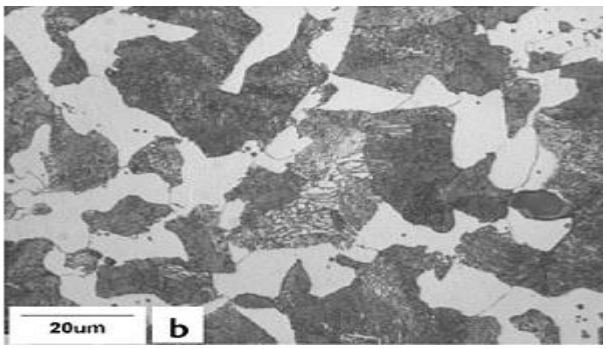

(b) Ferrite and pearlite. Pearlite, the darker constituent, is a eutectoid mixture of ferrite and iron carbide.

The Jominy end-quench test measures the hardenability of steel; that is, the ability of the steel to partially or to completely transform from austenite to some fraction of martensite at a given depth below the surface when cooled under a given condition from high temperature. A quench and temper heat treatment uses this phase transformation to harden steels. Tempering the martensite microstructure imparts a good combination of strength and toughness to the steel. Without tempering, martensite is hard, but brittle.
To select steel for a component that will be heat treated, it is important to know its hardenability. Both alloying and microstructure affect the hardenability, allowing the correct steel and quenching rate to be selected. Prior processing of the steel also affects the microstructure and should also be considered.

Hardening of steels can be understood by considering that on cooling from high temperature, the austenite phase of the steel can transform to either martensite (Fig. 2a) or a mixture of ferrite and pearlite (Fig. 2b). The ferrite/pearlite reaction involves diffusion, which takes time. However, the martensite transformation does not involve diffusion and essentially is instantaneous. These two reactions are competitive, and martensite is obtained if the cooling rate is fast enough to avoid the slower formation of ferrite and pearlite. In alloyed steels, the ferrite/ pearlite reaction is further slowed down, which allows martensite to be obtained using slower cooling rates. Transformation to another possible phase (bainite) can be understood in a similar way.
Hardenability describes the capacity of the steel to harden in depth under a given set of conditions. For example, a steel of a high hardenability can transform to a high fraction of martensite to depths of several millimetres under relatively slow cooling, such as an oil quench. By comparison, a steel of low hardenability may only form a high fraction of martensite to a depth of less than a millimetres, even under quite rapid cooling, such as water quench.

Steels having high hardenability are required to make large high-strength components, such as large extruder screws for injection molding of polymers, pistons for rock breakers, mine-shaft supports, aircraft undercarriages, as well as for small, high-precision components, such as die-casting molds, drills and presses for stamping coins. The slow-

er cooling rates that can be used for high hardenability steels can reduce thermal stresses and distortion. Steels having low hardenability may be used for smaller components, such as chisels and shears, or for surface-hardened components, such as gears, where there is a desire to maintain a ferrite/pearlite microstructure at the core to improve toughness. The Jominy end-quench test is the standard method to measure the hardenability of steels.
(ALNAHYAN, 2008.) (Finnish Standard Assoiciation SFS-EN ISO, 2011.)

2.5 Advantages & disadvantages of Jominy Test

The Jominy end-quench test is developed as a cost- and time-effective way to determine the hardenability of steel. The test is easy to perform and provides useful information if you know how to use it. The results of the test allow comparing steels to determine their equivalent hardenability. However, the hardness values achieved in the test cannot be used directly for actual parts being oil quenched as it is only a prediction. Furthermore, is that it is not discriminating when applied to steel of low hardenability. For such steels, the S-A-C test is considered more reliable. (Herring, 2001.)

2.6 Testing Procedure

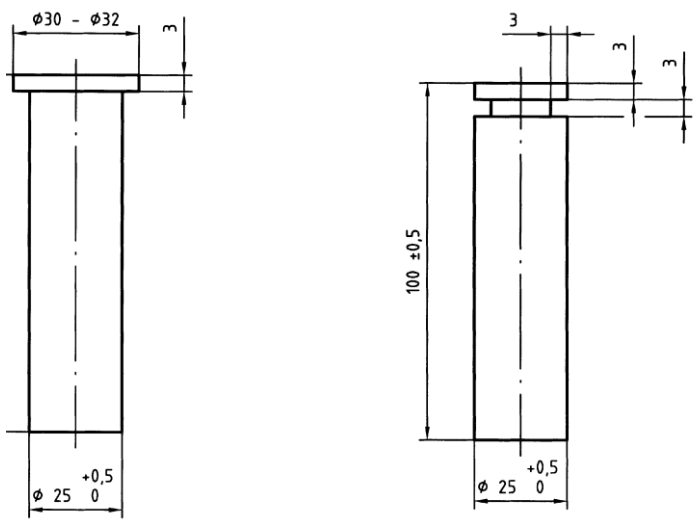

FIGURE 3 *(A)The Jominy test: Jominy test specimen*

The test sample is a 100-mm (4 in.) long by 25.4 mm (1 in.) diameter cylinder (Fig. 3a). The steel sample is normalized (to eliminate differences in microstructure due to previous hot working) and then austenitzed usually at a temperature of 800 to 925°C.

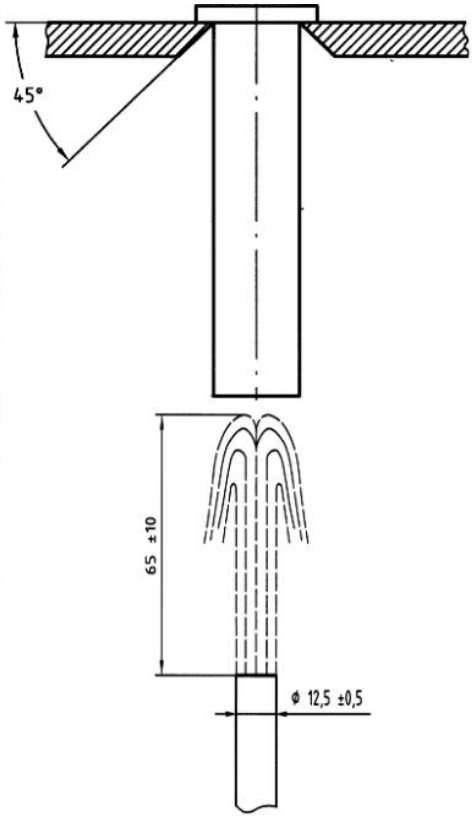

(b) (c)

FIGURE 4 *The Jominy test:*
(b) Jominy test equipment (specimen is inserted at the top, above a jet of water);
(c) Schematic diagram showing the cooling of the Jominy test specimen.

The test sample is quickly transferred to the test fixture (Fig. 4b), which quenches the steel by spraying a controlled flow of water onto one end of the sample (Fig. 4c). The cooling rate varies along the length of the sample, from very rapid at the quenched end where the water strikes the specimen, to slower rates that are equivalent to air cooling at the other end.

The round specimen is then ground flat along its length on opposite sides to a depth of at least 0.38 mm to remove decarburized material. Care should be taken that the grinding does not heat the sample, as this can cause tempering, which can soften the steel. Hardness is measured at intervals from the quenched end, typically at 1.5 mm intervals for alloy steels and 0.75 mm for carbon steels, beginning as close as possible to the

quenched end. The hardness decreases with distance from the quenched end. High hardness occurs where high volume fractions of martensite develop. Lower hardness indicates transformation to bainite or ferrite/pearlite microstructures. (Finnish Standard Assoiciation SFS-EN ISO, 2011.)

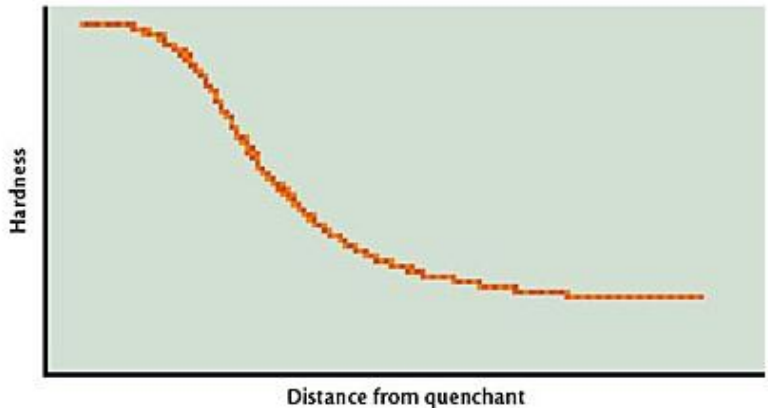

FIGURE 5 *Schematic of typical hardness profile in a Jominy specimen*

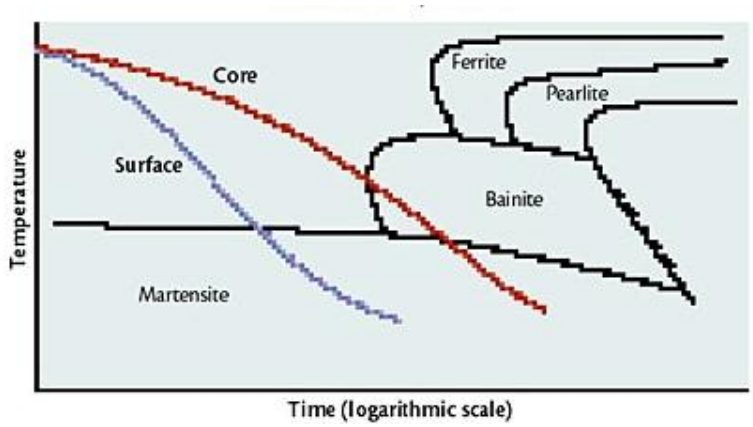

FIGURE 6 *Schematic continuous cooling transformation (CCT) diagram for an al steel. The cooling curves at the surface and core of a large oil-quench component are shown; the surface will be transformed to martensite, but t core will have a bainitic structure with some martensite.*

Measurement of hardness commonly is carried out using a Rockwell or Vickers hardness tester. Conversion charts are available to relate the different hardness scales, but care should be taken to use the correct charts for steel. Rockwell and Vickers hardness tests deform the metal differently, and the results are affected by work hardening. The

hardenability is described by a hardness curve for the steel (Fig. 6), or more commonly by reference to the hardness value at a particular distance from the quenched end. (James Marrow, Manchester Materials Science Centre, UMIST, Manchester, UK , 2001.)

2.7 Uses of hardenability values

Data from the Jominy end-quench test can be used to determine whether particular steel can be sufficiently hardened in different quenching media, for different section diameters. For example, the cooling rate at a distance of 10 mm (0.390 in.) from the quenched end is equivalent to the cooling rate at the centre of an oil-quenched 28-mm (1.1 in.) diameter bar. Full transformation to martensite in the Jominy specimen at this position indicates that a 28-mm diameter bar can be through hardened; that is, hardened through its full thickness.
A high hardenability is required for through hardening of large components. This data can be presented using CCT diagrams (continuous cooling transformation) [6], which are used to select steels to suit the component size and quenching media. Slower cooling rates occur at the core of larger components, compared with the faster cooling rate at the surface. In the example in Fig. 5, the surface will be transformed to martensite, but the core will have a bainitic structure with some martensite. Slow quenching speeds often are selected to reduce distortion and residual stress in components. (James Marrow, Manchester Materials Science Centre, UMIST, Manchester, UK , 2001)

2.8 Effects of alloying and microstructure

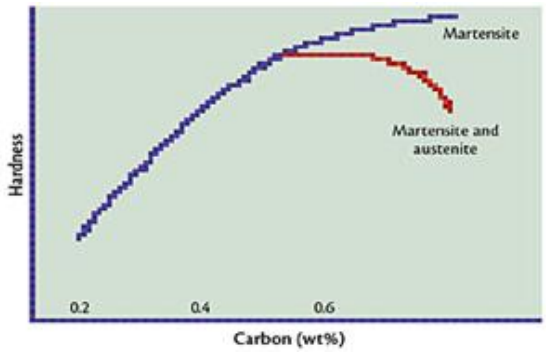

FIGURE 7 *Schematic of the effect of carbon content (wt%) on the hardness of martensite and the combined hardness of martensite and retained austenite, which can develop at high carbon levels*

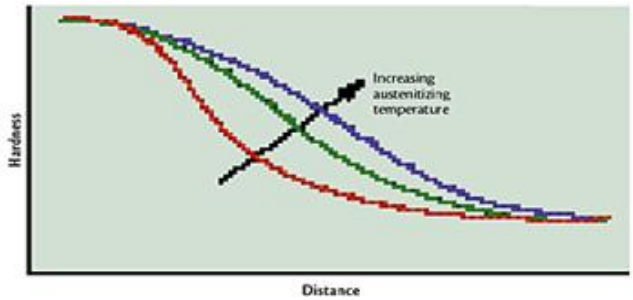

FIGURE 8 *Schematic of the effect of austenitizing temperature on the hardenability o steel; higher austenitizing temperatures can coarsen the microstructure*

The Jominy end-quench test measures the effects of microstructure, such as grain size, and alloying on the hardenability of steels. The main alloying elements that affect hardenability are carbon, a group of elements including Cr, Mn, Mo, Si and Ni, and boron. (James Marrow, Manchester Materials Science Centre, UMIST, Manchester, UK , 2001)

2.8.1 Carbon

Carbon controls the hardness of the martensite; increasing carbon content increases the hardness of steels up to about 0.6wt% carbon. However, at higher carbon levels, the critical temperature for the formation of martensite is depressed to lower temperatures. The transformation from austenite to martensite may then be incomplete when the steel is quenched to room temperature, which leads to retained austenite. This composite microstructure of martensite and austenite results in a lower steel hardness, although the hardness of the martensite phase itself is still high.

Carbon also increases the hardenability of steels by retarding the formation of pearlite and ferrite. Slowing down this reaction encourages the formation of martensite at slower cooling rates. However, the effect is too small to be commonly used for control of hardenability. Furthermore, high-carbon steels are prone to distortion and cracking during heat treatment and can be difficult to machine in the annealed condition before heat treatment. It is more common to control hardenability using other elements and to use carbon levels of less than 0.4wt%. (James Marrow, Manchester Materials Science Centre, UMIST, Manchester, UK , 2001)

2.8.2 Other alloying elements

Cr, Mo, Mn, Si, Ni and V retard the phase transformation from austenite to ferrite and pearlite. The most commonly used elements are Cr, Mo and Mn. The retardation is due to the need for redistribution of the alloying elements during the diffusional phase transformation from austenite to ferrite and pearlite. The solubility of the elements varies between the different phases, and the interface between the new growing phases cannot move without diffusion of the slowly moving elements. There are quite complex interactions between the different elements, which also affect the temperatures of the phase transformation and the resultant microstructure. Alloy steel compositions are, therefore, sometimes described in terms of a carbon equivalent, which describes the magnitude of the effect of all of the elements on hardenability. Steels of the same carbon equivalent have similar hardenability. (James Marrow, Manchester Materials Science Centre, UMIST, Manchester, UK , 2001.)

2.8.3 Boron

Boron is a very potent alloying element, typically requiring 0.002 to 0.003wt% to have an equivalent effect as 0.5wt% Mo. The effect of boron is independent of the amount of boron, provided a sufficient amount is added. The effect of boron is greatest at lower carbon contents and it typically is used with lower carbon steels.

Boron has a very strong affinity for oxygen and nitrogen, with which it forms compounds. Boron can, therefore, only affect the hardenability of steels if it is in solution. This requires the addition of "gettering" elements such as aluminum and titanium to react preferentially with the oxygen and nitrogen in the steel. (James Marrow, Manchester Materials Science Centre, UMIST, Manchester, UK , 2001)

2.9 Grain size

Increasing the austenite grain size increases the hardenability of steels. The nucleation of ferrite and pearlite occurs at heterogeneous sites such as the austenite grain boundaries. Increasing the austenite grain size therefore decreases the available nucleation sites, which retards the rate of the ferrite/pearlite phase transformation. This method of increasing the hardenability is rarely used because substantial increases in hardenability

require large austenite grain size, obtained through high austenitizing temperatures. The resultant microstructure is quite coarse, with reduced toughness and ductility. However, the austenite grain size can be affected by other stages in the processing of steel, and, therefore, the hardenability of a steel also depends on the previous stages used in its production. (James Marrow, Manchester Materials Science Centre, UMIST, Manchester, UK , 2001)

2.10 How to produce the result

There are several techniques for reviewing process results including both simulated and practical approaches of jominy test. Some include:

2.10.1 Contourplots

A contour plot is a graphical technique for representing a 3-dimensional surface by plotting constant *z* slices, called contours, on a 2-dimensional format. That is, given a value for *z*, lines are drawn for connecting the (x,y) coordinates where that *z* value occurs.

The contour plot is an alternative to a 3-D surface plot.

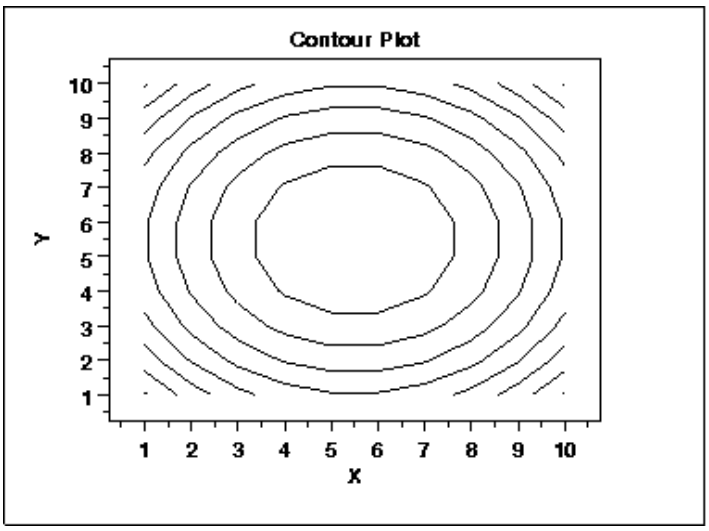

FIGURE 9 *This contour plot shows that the surface is symmetric and peaks in the centre.*

Other techniques include:

- • Iso-lines and Iso-surfaces
  • Vector-Display
  • x-y diagrams
  • Symbol plots
  • Numerical presentation
  • Cutting planes
  • Animations
  (NIST/SEMATECH, 2011.).

3 DESIGN PLAN OF JOMINY TESTING MACHINE

3.1 Basic concept of the design

The idea and manner of design is to follow through with the process of meeting up with the CE standards- Conformité Européenne (Wikipedia, CE mark, 2010) and complementing for the deficits the current machine is having while doing so at a low budget rate. To achieve this, the use of PRO Engineer CAD programme was employed and the points explained below where also addressed to complete the design.

3.1.1 Design standardization

By this, we adopt generally accepted uniform procedures, dimensions, materials, or parts that directly affect the design, more to say, screw holes are unified as much as possible, the type of material and thickness of metal sheet are unified as often as possible so as to endeavour to use the same material piece for the whole process. This will ensure the work piece can be made of lesser tools, less material wastage is achieved, work is done faster and general overall cost is cheaper.

3.1.2 Why design a new machine & Problems of existing machine

This is because of the need for a more efficient jominy testing machine as the present machine available is deficient in a number of areas listed below:

- The visibility system for the work in progress is poor, thereby preventing who is using the machine from having a good view of the work in progress.
- The test piece gripper and support system is not very efficient.
- The used water disposal system is very poor and delays the continuation of a new test quickly as it goes out slowly.
- The design is not mobile which in some instances is required to move it to a different location.
- There is not good control of the water supply or the measurement data achieved from a test process.

3.1.3 Possible changes & why this was considered the better design over possible options

Before the selection of this design choice, two other drawings were made and considered equally alongside the selected choice. This selection process was based of the cost of manufacture, complexity and simplicity of the design and operation process, easy access to the Jominy test piece and the time taken for general operation process. This was selected because it met more of these requirements and furthermore, looked better and had some safety devices installed and low cost. It was done with a major aim of improving pre-existing design and it was accomplished.

10a *10b*

FIGURE 10 *Diagrams of the New design plan(10a)beside the existing design plan(10b)showing basic comparisons*

3.1.4 Features of the new design:

- **Appearance and style:** The new design looks better and the style is more modern than the pre-existing machine.
- **Dimensions:** The size of the new design is a little similar to the existing one which follows laboratory standard of convenient working height lengths for a device rising from the floor. The general size dimensions average 500mm x 500mm x 800mm.
- **Standardized parts:** More of the parts follow standards so it will be easy to manufacture if it is considered for large production.
- **Safety requirements:** The machine is designed stylish yet many safety requirements are put into consideration such as the wheels which would enable the machine to be moved without harm from one place to another. It also has a transparent viewing top frame installed which will protect the operator or anyone around from getting to closer and at the same time give them the advantage of having a good view of the entire procedure.

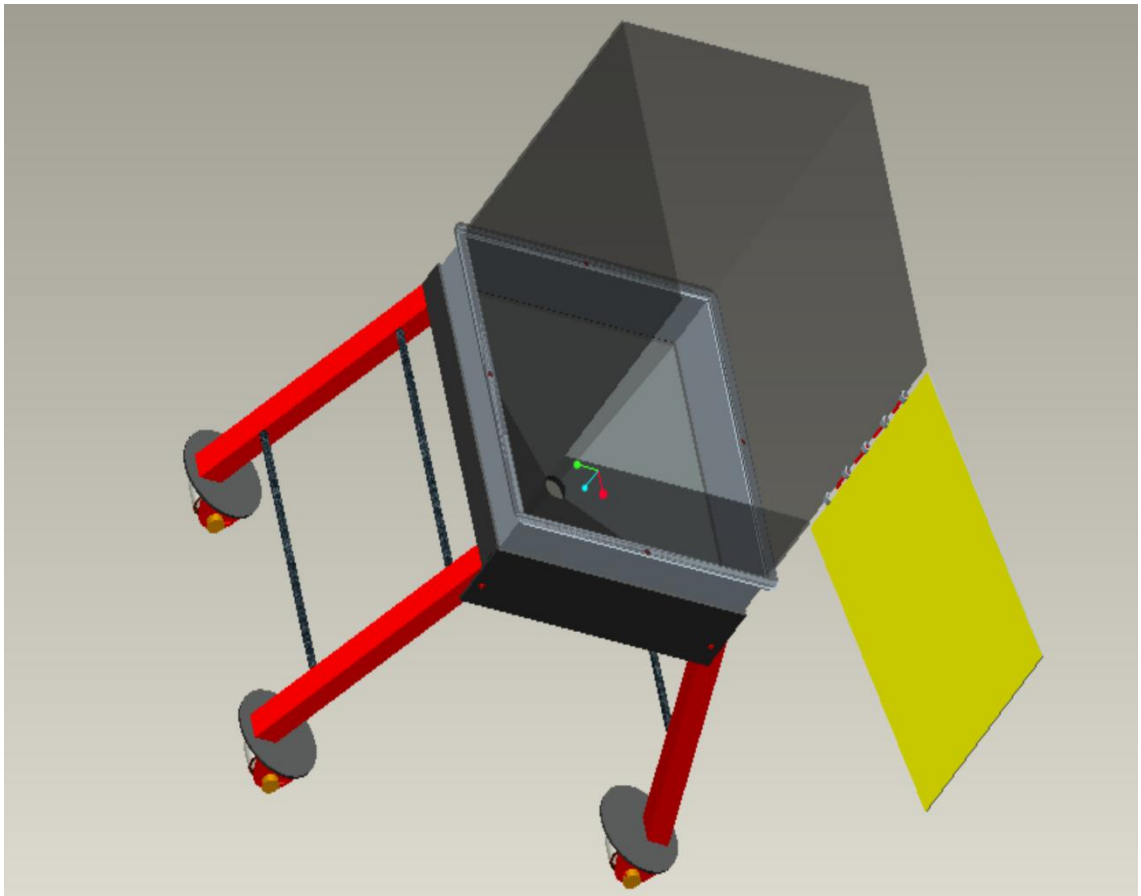

FIGURE 11 *3D design of the new design plan showing the inner view of the Jominy testing machine, showing the housing structure.*

- **Water Control and data Analysis:** The new design has a larger water control system as taps have been installed and the water is allowed to flow in and out at the will of the operator. Furthermore, the outlet is much larger and the time taken for the water to flow out after the experiment is much faster than previous design.

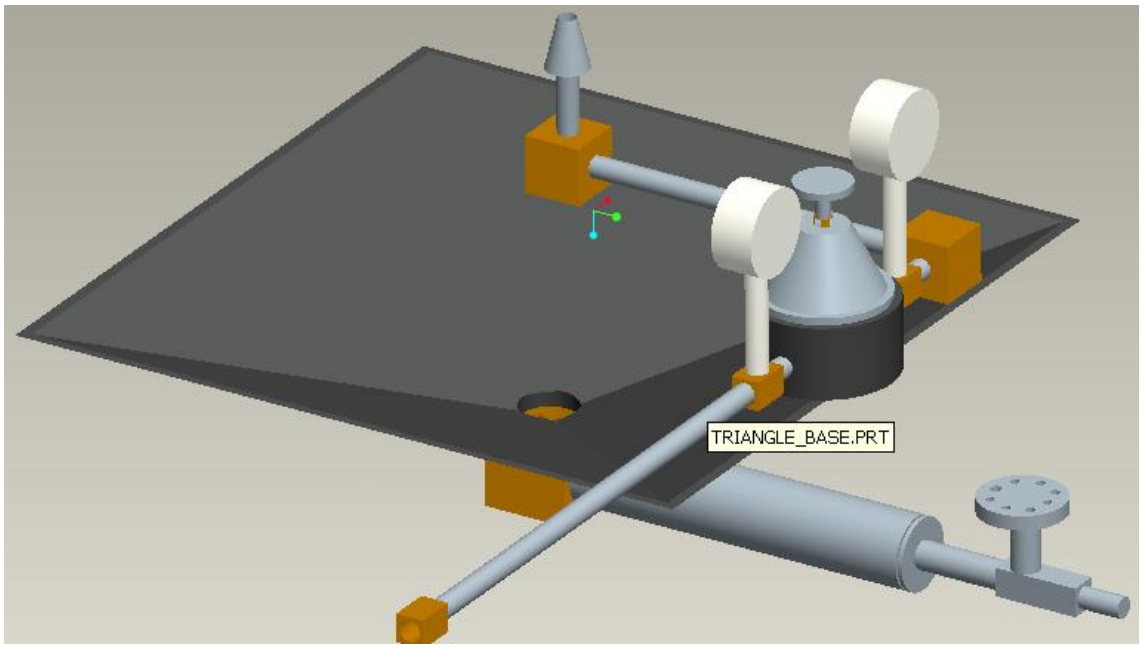

FIGURE 12 *3D of the inner structural design showing the basic mechanism of the testing machine.*

3.2 Parts drawing and design:

This is the first stage using the 3D in which all the various parts to make the machine is done one after the other. This is a very crucial part of the design as any mistake done here could go a very long way of altering or jeopardizing the whole project work. Drawings of the various parts are attached at the end of this chapter.

3.2.1 Welding drawing and design:

Upon completion of the various parts drawings, they are categorized based on where and how they are to be used so with that in mind the parts drawn which are fixed to-

gether and function best as a fixed material are welded together. Drawings of the welded parts are attached at the end of this chapter.

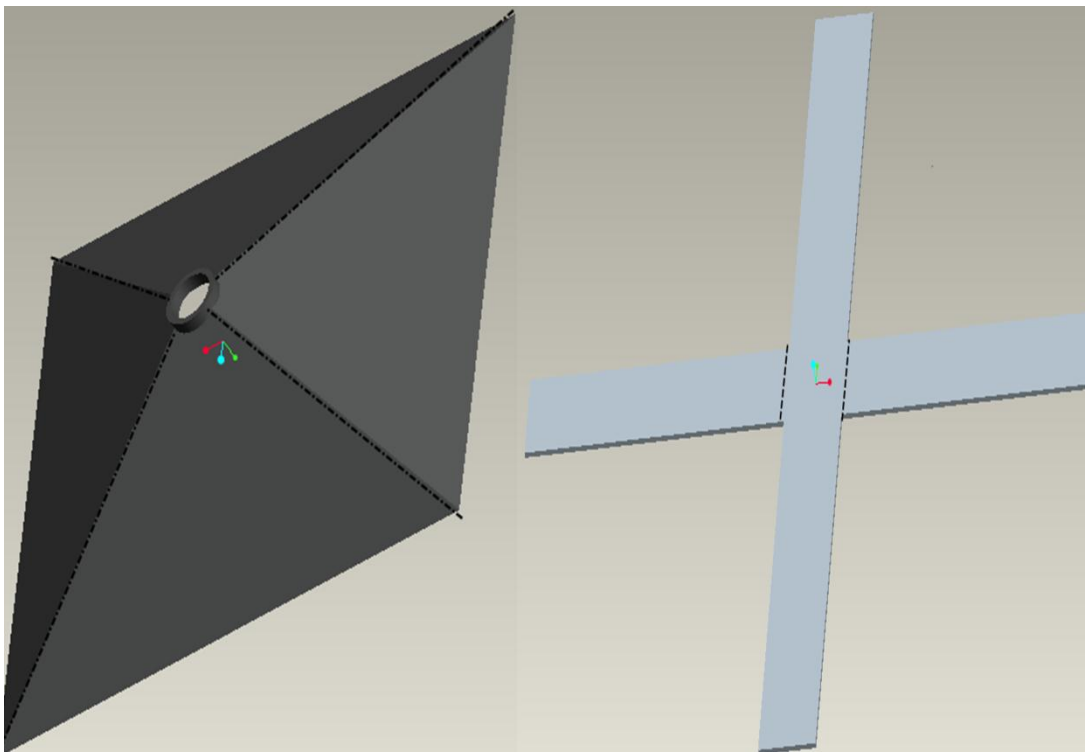

FIGURE 13 *3D design showing part of the new testing machine, which the mechanism will be mounted on top.*

3.2.2 2-D Drawings:

Having completed all the stated drawings in the 3-D format, a 2-D format is done. This is what will be taken to the manufacturing company whom will make the parts for the actual manufacturing to begin.

3.2.3 Parts with high level of precision:

Amongst the parts to be designed in this project is the support for the Jominy test piece. This requires a high level of accuracy; as such to prevent errors and defects much caution should be used when designing this component. There are two parts to be produced this is to meet up with the two different Jominy tests piece standards. The first is to be fixed permanently with the other assembled parts while the other is to be made such that it can be attached or removed to the machine.

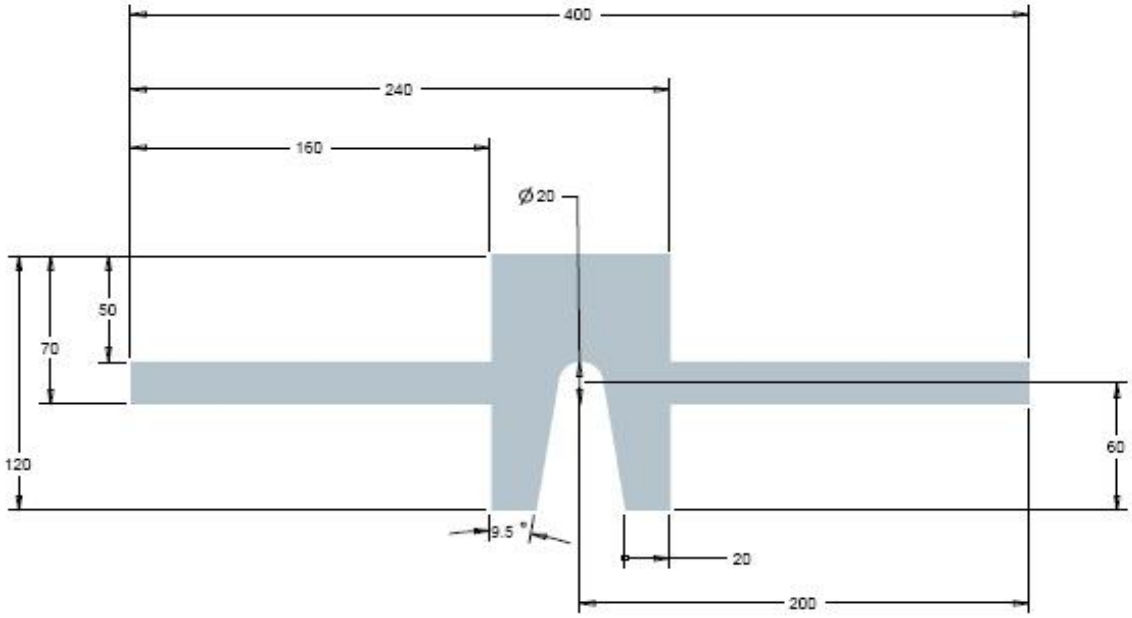

FIGURE 14 *Design of the possible support for the test piece sample.*

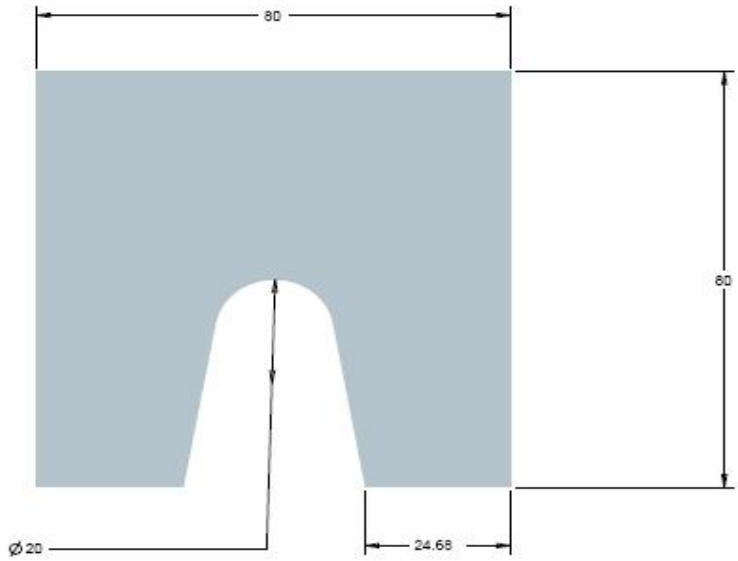

FIGURE 15 *Second possible design for the test piece support which will hold the second possible type of work piece.*

3.2.4 Assembly drawing and design:

Assembly drawing and design is the stage which follows afterwards. This does not just involve putting the parts together but also involves making some adjustments to the part to make it ready such as making some screw holes shown in all of the parts and welding drawings. Drawings have been attached for your viewing.

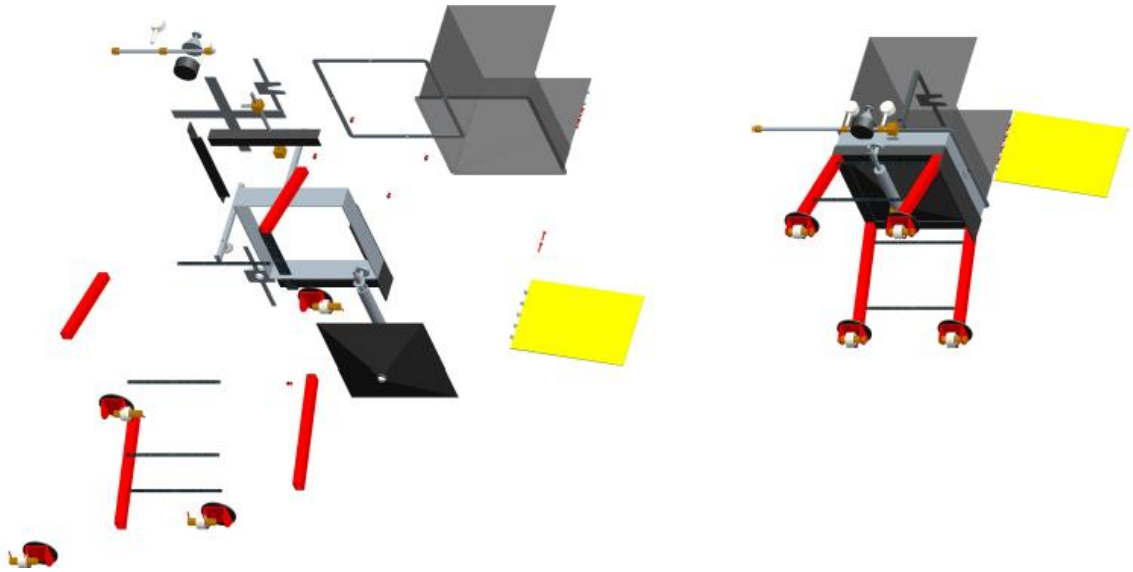

FIGURE 16 *3D of the exploded view (right) containing the various components, beside the final assembled work (left) of the design.*

4 MANUFACTURING OF JOMINY TESTING MACHINE POSSIBLE PLAN.

Having made a successful 3D model and 2D drawings of the design, a follow through of the last chapter can be said to be a manufacturing manual as it involves the making of all the parts exactly as required which is followed by all the other steps to get the machine into a ready to use condition. Each paragraph is directly linked to the one before and after which when done one should have the Jominy end quenching machine. Of course it does not contain information of how the parts will be cut or details in that regards as it is assumed it will be done by a third party which is specialized in that field.

1.1 Cost &Economic approach to design and manufacture

For any design to be considered successful, the cost of manufacturing and production should be considered and analysed and managed to be as cheap as possible before actual design commences. For this design, efforts has been made to ensure it is cheap by standardizing many of the parts and ensuring same materials could be used where ever possible to reduce waste and prevent the purchase of more materials. However, the actual cost for this design cannot be reached at this moment because some of the manufactured parts will be produced by a sister company. But with bill of how much such design will cost the cost can easily be achieved.

1.1.1 Safety & Maintenance of new manufactured machine

Measures to ensure that the design is very safe were followed. Furthermore, extra features such as the visibility screen barrier, wheel for easy mobility which should be locked when required in a fixed position are some of additional features which make it safe and give it a unique look which the old design does not have. Furthermore, maintaining of this design is relatively cheap given there are less fragile or mobile parts; also the material to be used does not require special maintenance other than that basic kind for metal works. Some other difference in the maintenance of the new design is presence of the transparent material used for the visibility frame. These have to be cleaned before use to maintain a good visibility.

5 CONCLUSION

Just as heat treatment process is important in manufacturing processes, Jominy test is as well important for it has proven to be a most resourceful tool in achieving and determining the hardness of given metal pieces which must be determined for all metals before they can actually be used for any given project.

To begin a design work without determining the hardness, toughness, strength or other technical details of the metal piece will be to make a work blindly or rather as a non-professional. For these are details which will always be in the specification bill as required by law before a product can be approved with the CE marking which is the minimum conformance mark for any product designed or manufactured.

The proposed designed seems to achieve a higher level of precision however, there are some hitches which will make it complicated in designing.

The control tap switch we the use of a pressure valve will make the machine advance but complicated to operate. Furthermore, there are issues with the operation mechanism that has not yet been resolved and a further look into that concept could be a trilling experience.

The work piece holder requires a to be held tightly to the support, however, a good an effective method to tackle this issue was not resolved there by reducing the efficiency of the design greatly. A possible solution will be to use the currently technology in the existing machine there by unifying the efficiency in the said section. The new machine however will still maintain a higher advantage as a result of the enclosure design formats which adds safety, better mobility features, and wider visibility during use and it serves generally as a better teaching and instructing tool.

An over-roll evaluation, the project can be regarded as a slight improvement if a practical model was to be designed. To achieve this, the use the structural design of the proposed design and combine the mechanism of the old system in a couple of sections.

SOURCES

AG, S. (20th. Janauary 2011a). *Heat treatment and characteristics*. Referenced 20th. January 2012address www.saarstahl.de: http://www.saarstahl.de/arten_der_waermebehandlung.html?&L=1

ALNAHYAN. (15th. Dec 2008). *All About Materials Engineering and Me.* Referenced 12th. October 2011address http://nayhan.wordpress.com/: http://nayhan.wordpress.com/pearlite-martensite-austenite-dan-bainite/

Denis S., e. (1984). Heat treatment in metallic materials. Sweden: linkoping.

efunda. (20th. December 2011). *Annealing*. Referenced 20th. December 2011address www.efunda.com: http://www.efunda.com/processes/heat_treat/softening/annealing.cfm

Harald Porzner, P. M. (20th. July 2008). *Heat Treatment Simulation Can Help Avoid Process Problems.* Referenced 15th. Nov 2011address http://www.gearsolutions.com: http://www.gearsolutions.com/article/detail/5819/heat-treatment-simulation-can-help-avoid-process-problems

Herring, D. H. (10th. october 2001). *Jominy Testing: The Practical Side*. Referenced 29th. June 2011addresshttp://www.industrialheating.com: http://www.industrialheating.com/CDA/Archives/c8b7fcf0ddbb7010VgnVCM100000f932a8c0____

Industrial heating, T. i. (15th. February 2012). *Jominy Testing: The Practical Side* . Referenced 15th. February 2012addresswww.industrialheating.com: http://www.industrialheating.com/Articles/Feature_Article/c8b7fcf0ddbb7010VgnVCM100000f932a8c0____

James Marrow, Manchester Materials Science Centre, UMIST, Manchester, UK . (7th. September 2001). *Understanding The Jominy End Quench Test* . Referenced 10th. October 2011addresshttp://www.industrialheating.com: http://www.industrialheating.com/CDA/Archives/22d2fcf0ddbb7010VgnVCM100000f932a8c0____

NIST/SEMATECH. (7th. June 2011). *e-Handbook of Statistical Methods.* Referenced 7th. Janurary 2012addresshttp://www.gearsolutions.com: http://www.itl.nist.gov/div898/handbook/eda/section3/contour.htm

Westmoreland Mechanical Testing & Research, I. (11th. February 2012). *The Jominy End Quench Test ASTMA A255*. Referenced 11th. February 2012addresswmtr: http://www.wmtr.com/Content/Jominy.htm

Wikipedia. (10th. July 2010). *CE mark.* Referenced 16th. August 2011addressWikipedia, the free encyclopedia: http://en.wikipedia.org/wiki/CE_mark

Wikipedia. (30th. January 2012). *the free encyclopedia, 2010*. Referenced 30th. January 2012addresswww.wikipedia.org: http://en.wikipedia.org/wiki/Heat_treatment

Wojciech Sitek, J. T. (April, 2008). Physical and Numerical Simulation of Materials Processing. *Materials Science Forum (Volumes 575 - 578)*, 892-897.

Finnish Standard Assoiciation SFS-EN ISO, 6. (15th. Octber 2011.). *Steel : hardenability test by end quenching (Jominy test).* Helsinki, Finland: Finnish Standard Assoiciation SFS-EN ISO , 642 .

Appendix 1

3D MODELS OF THE PROPSOED DESIGN

3D assembly models have being attached such that the designer looks at the end model and produce the required number of parts to meet the achieve a complete replicate of the model.

Tätä dokumenttia taikka sen osaa ei saa kopioida, uudelleenkäyttää taikka tallentaa No part of this document may be reproduced or distributed in any form or by
missään muodossa eikä mihinkään tarkoitukseen, ilman kirjallista lupaa omistajalta. any means, or stored in a data base, without the written permission of owner.

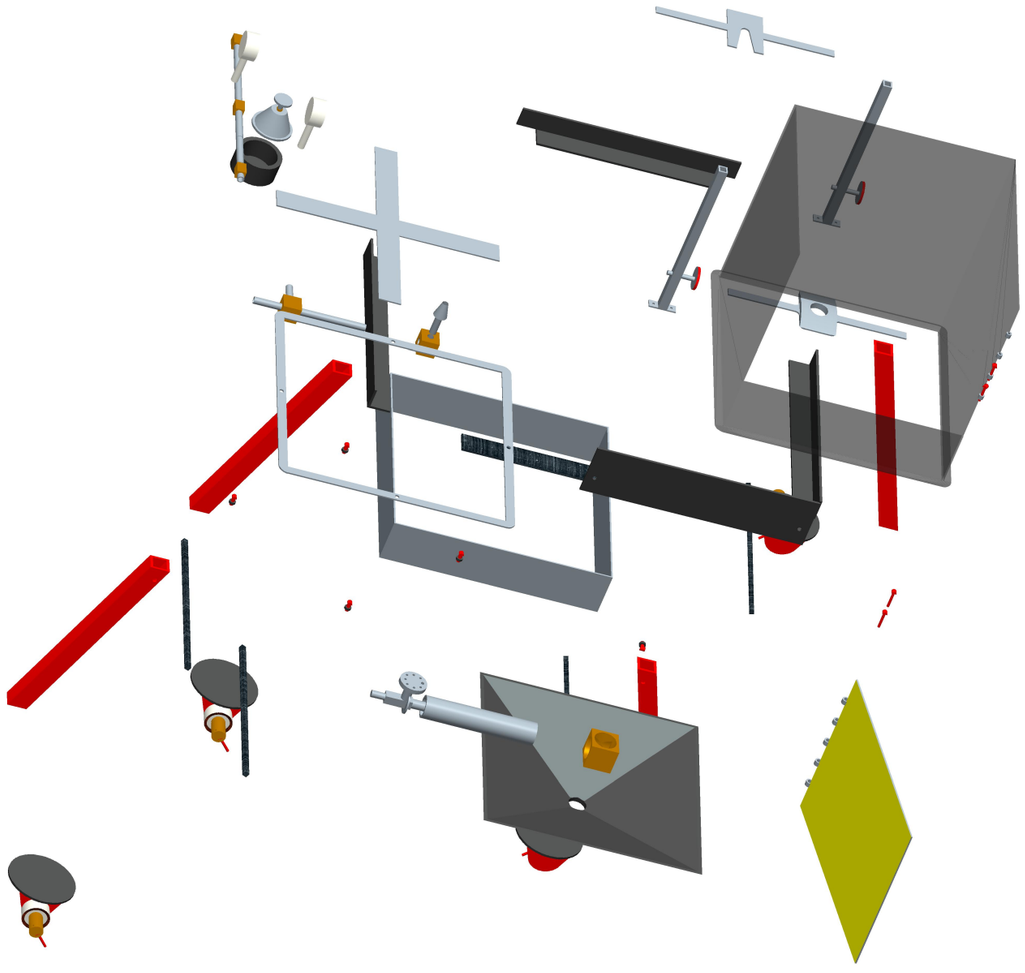

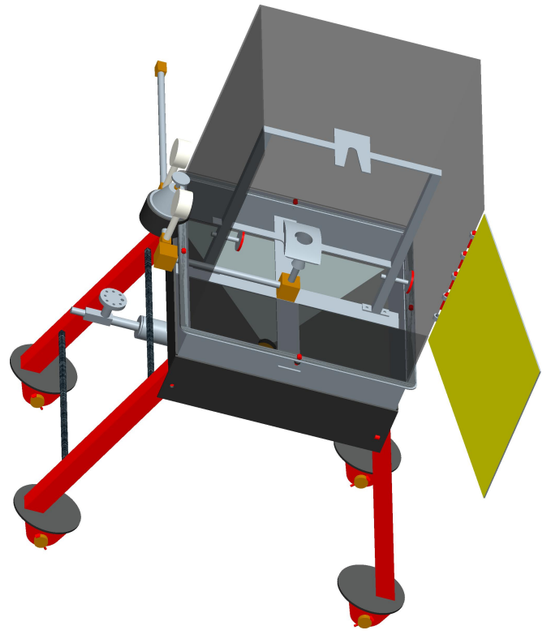

Revision:	Kuvaus: / Description:	Pvm: / Date:	Muuttaja: / By:

HAMK
University of Applied Sciences

Yleistoleranssit:
General tolerances:

Skaala:
Scale:
23:300

Tunnus:
Identific:

Nimitys:

Descript:

Suunnittelija / Pvm:
Designer / Date: James A Orivri -

Hyväksytty / Pvm:
Approved / Date: -

Tuote:
Product:

Korvaa:
Replays:

Kokonaismassa:
Total mass: 6399720.948 Kg

Materiaali:
Material:

Värisävy:
Color:

Pinta käs:
Treatment:

Pint. viimeist:
surf. finish:

Sivu numero:
Sheet nro: 1/1

Model filename: BASE_ASSEMBLY
Drawing filename: EXPLODED_ASSEMBLED_VIEW
Drawing file date: 21.02.2012

Tätä dokumenttia taikka sen osaa ei saa kopioida, uudelleenkäyttää taikka taikka tallentaaNo part of this document may be reproduced or distributed in any form or by missään muodossa eikä mihinkään tarkoitukseen, ilman kirjallista lupaa omistajalta, any means, or stored in a data base, without the written permission of owner.

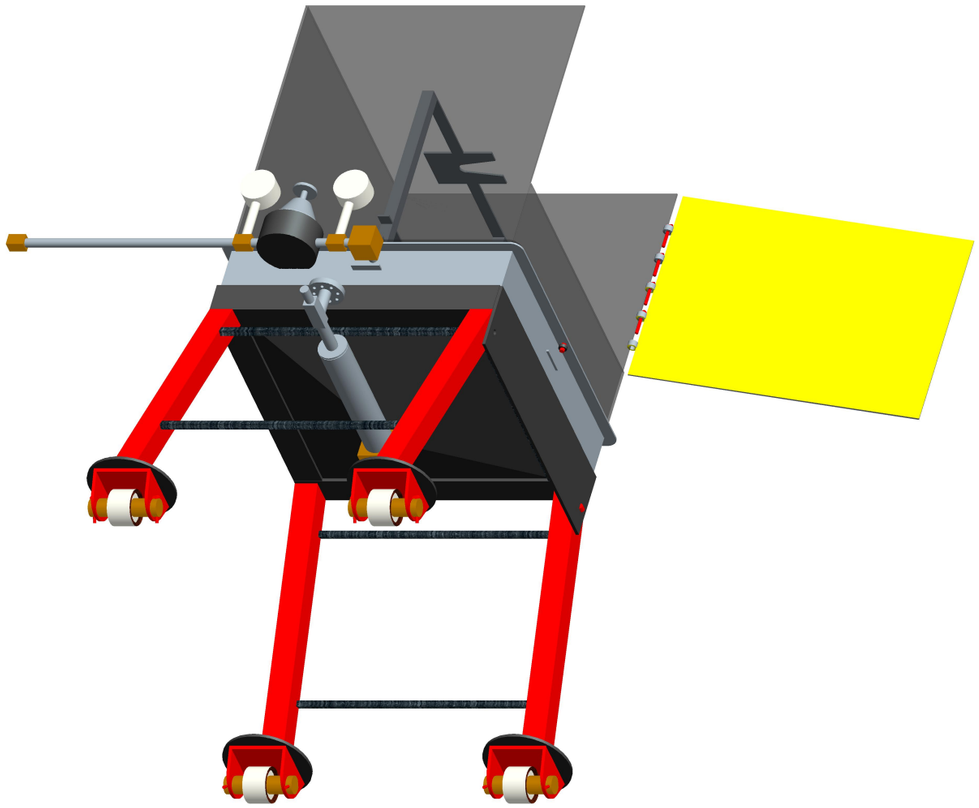

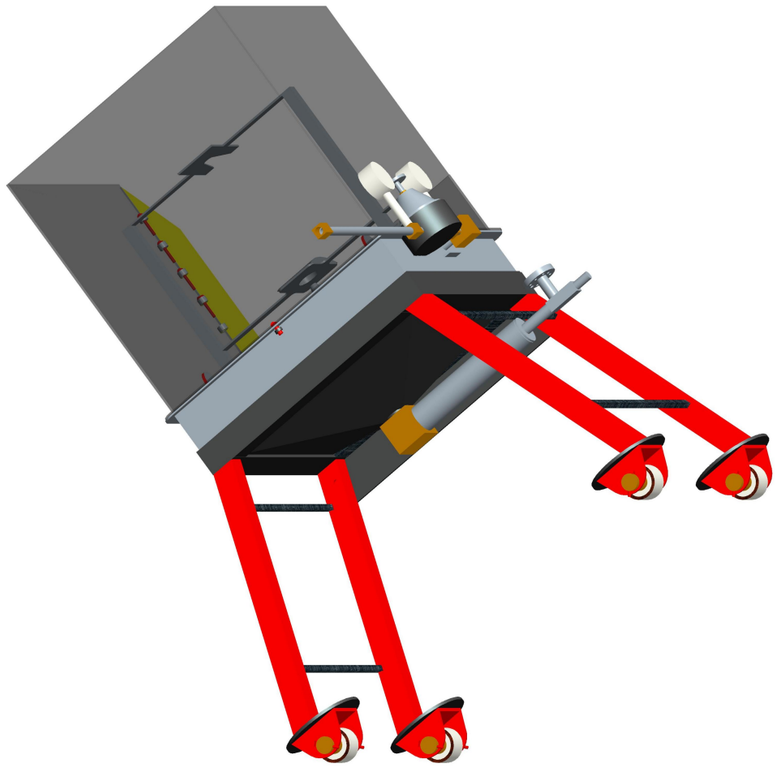

Revision:	Kuvaus: / Description:	Pvm: / Date:	Muuttaja: / By:

HAMK
University of Applied Sciences

Yleistoleranssit:
General tolerances:

Skaala:
Scale: 1:10

Tunnus:
Identific:

Nimitys:

Descript:

Suunnittelija / Pvm:
Designer / Date: James A Orivri -

Hyväksytty / Pvm:
Approved / Date: -

Tuote:
Product:

Korvaa:
Replays:

Kokonaismassa:
Total mass: 6399720.948 Kg

Materiaali:
Material:

Värisävy:
Color:

Pinta käs:
Treatment:

Pint. viimeist:
surf. finish:

Sivu numero:
Sheet nro: 1/1

Model filename: BASE_ASSEMBLY

Drawing filename: COMPLETED_DRW_VIEWS

Drawing file date: 21.02.2012

Tätä dokumenttia taikka sen osaa ei saa kopioida, uudelleenkäyttää taikka tallentaaNo part of this document may be reproduced or distributed in any form or by
missään muodossa eikä mihinkään tarkoitukseen, ilman kirjallista lupaa omistajalta. any means, or stored in a data base, without the written permission of owner.

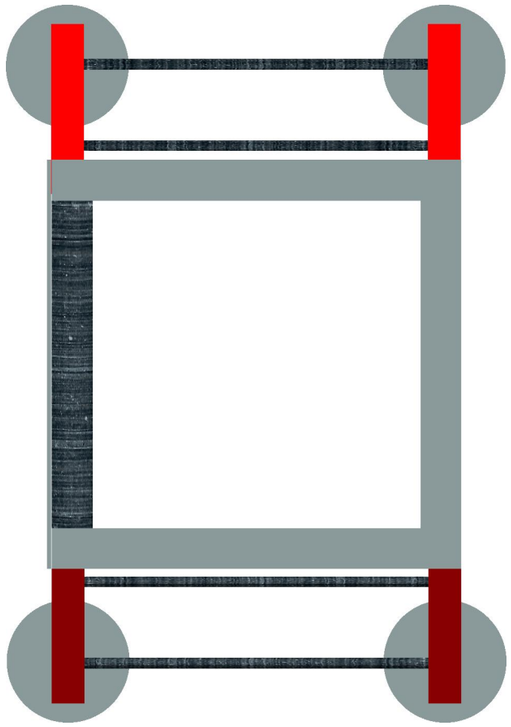

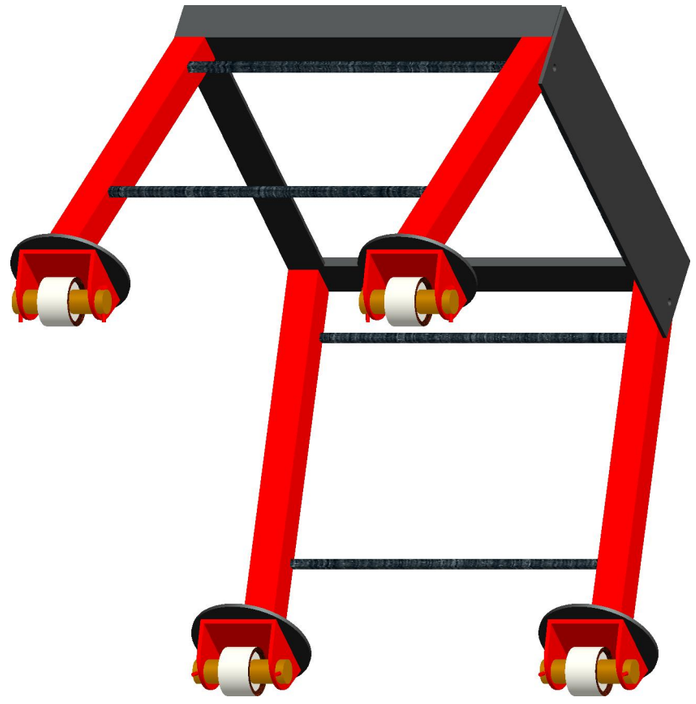

Revision:	Kuvaus: / Description:	Pvm: / Date:	Muuttaja: / By:

HAMK
University of Applied Sciences

Yleistoleranssit:
General tolerances:

Skaala:
Scale: 2:15

Tunnus:
Identific:

Nimitys:

Descript:

Suunnittelija / Pvm:
Designer / Date: James A Orivri -

Hyväksytty / Pvm:
Approved / Date: -

Tuote:
Product:

Korvaa:
Replays:

Kokonaismassa:
Total mass: 6399720.948 Kg

Materiaali:
Material:

Värisävy:
Color:

Pinta käs:
Treatment:

Pint. viimeist:
surf. finish:

Sivu numero:
Sheet nro: 1/1

Model filename: BASE_ASSEMBLY

Drawing filename: BASED_SUPPORT_ASSEMBLY

Drawing file date: 21.02.2012

Tätä dokumenttia taikka sen osaa ei saa kopioida, uudelleenkäyttää taikka tallentaaNo part of this document may be reproduced or distributed in any form or by
missään muodossa eikä mihinkään tarkoitukseen, ilman kirjallista lupaa omistajalta. any means, or stored in a data base, without the written permission of owner.

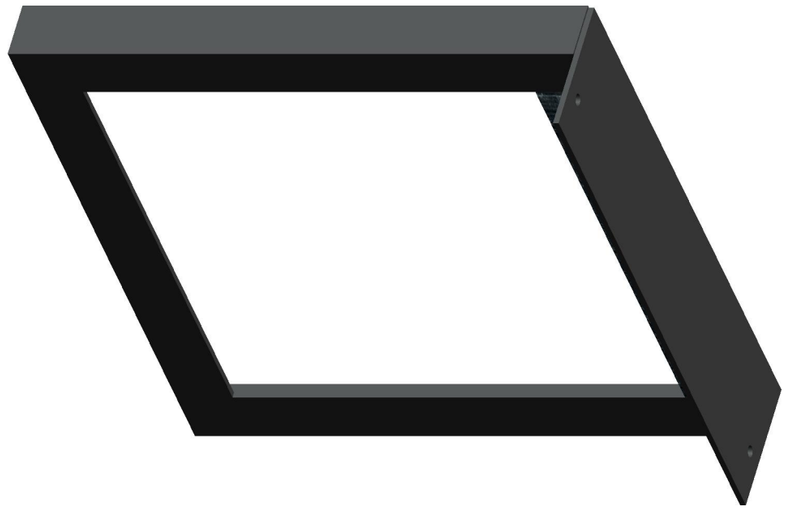

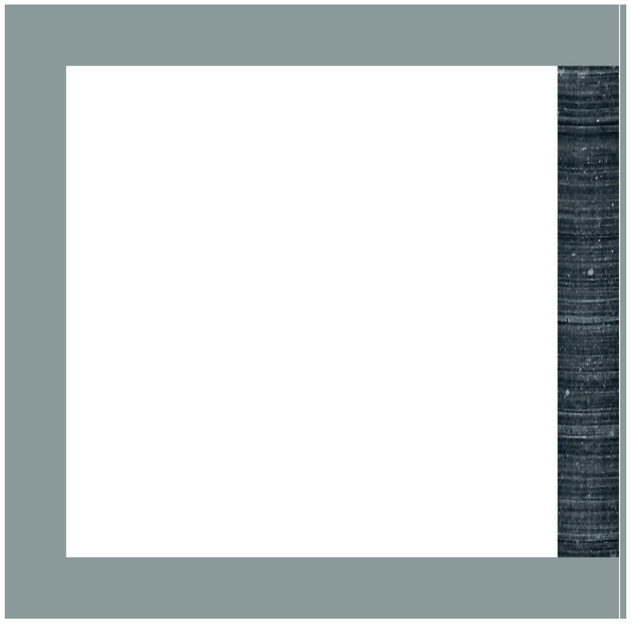

Revision:	Kuvaus: / Description:	Pvm: / Date:	Muuttaja: / By:

HAMK
University of Applied Sciences

Yleistoleranssit:
General tolerances:

Skaala:
Scale: 1:5

Tunnus:
Identific:

Nimitys:

Descript:

Suunnittelija / Pvm:
Designer / Date: James A Orivri -

Hyväksytty / Pvm:
Approved / Date: -

Tuote:
Product:

Korvaa:
Replays:

Kokonaismassa:
Total mass: 6399720.948 Kg

Materiaali:
Material:

Värisävy:
Color:

Pinta käs:
Treatment:

Pint. viimeist:
surf. finish:

Sivu numero:
Sheet nro: 1/1

Model filename: BASE_ASSEMBLY Drawing filename: TOP_SUPPORT_ASM Drawing file date: 21.02.2012

Tätä dokumenttia taikka sen osaa ei saa kopioida, uudelleenkäyttää taikka tallentaa ilman kirjallista lupaa omistajalta. No part of this document may be reproduced or distributed in any form or by any means, or stored in a data base, without the written permission of owner.

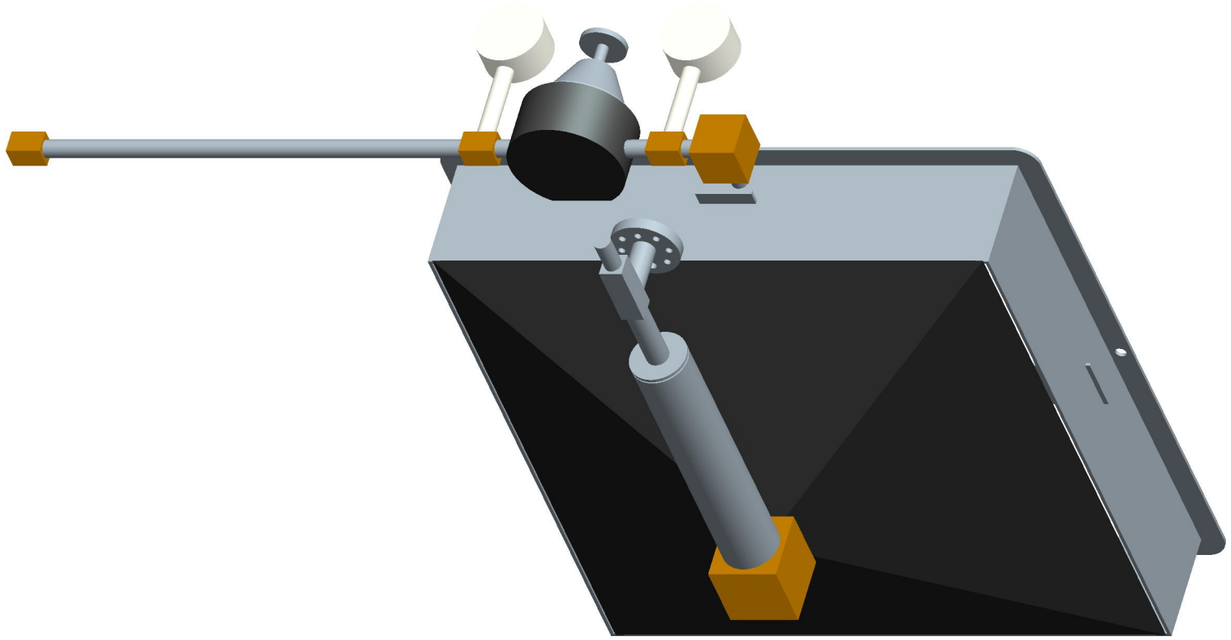

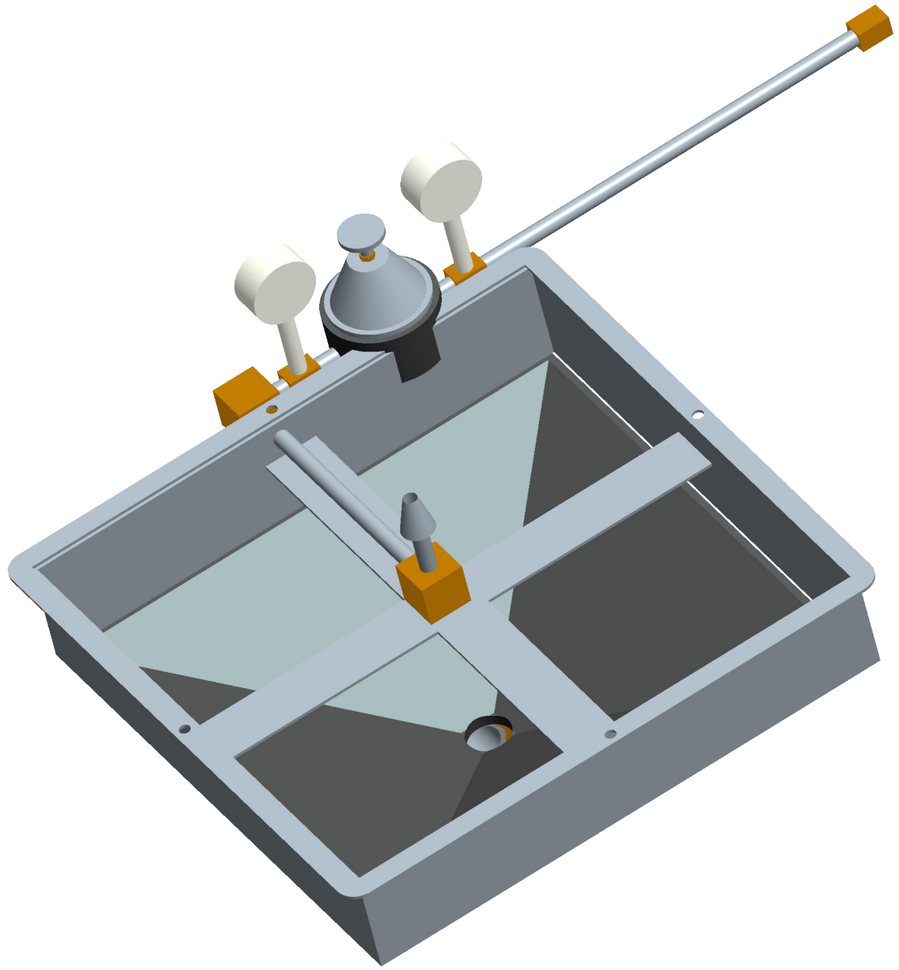

Revision:	Kuvaus: / Description:	Pvm: / Date:	Muuttaja: / By:

HAMK
University of Applied Sciences

Yleistoleranssit:
General tolerances:

Skaala:
Scale: 1:5

Tunnus:
Identific:

Nimitys:

Descript:

Suunnittelija / Pvm:
Designer / Date: James A Orivri -

Hyväksytty / Pvm:
Approved / Date: -

Tuote:
Product:

Korvaa:
Replays:

Kokonaismassa:
Total mass: 6399720.948 Kg

Materiaali:
Material:

Värisävy:
Color:

Pinta käs:
Treatment:

Pint. viimeist:
surf. finish:

Sivu numero:
Sheet nro: 1/1

Model filename: BASE_ASSEMBLY

Drawing filename: TTOP_SUPPORT_ASM

Drawing file date: 21.02.2012

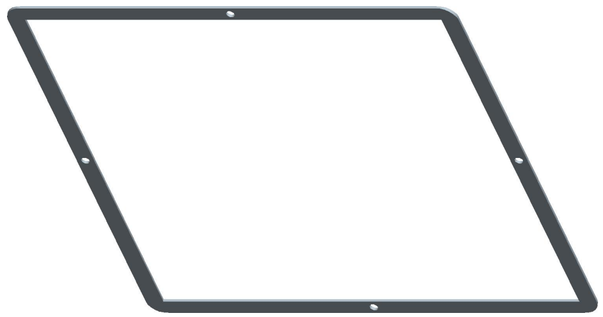

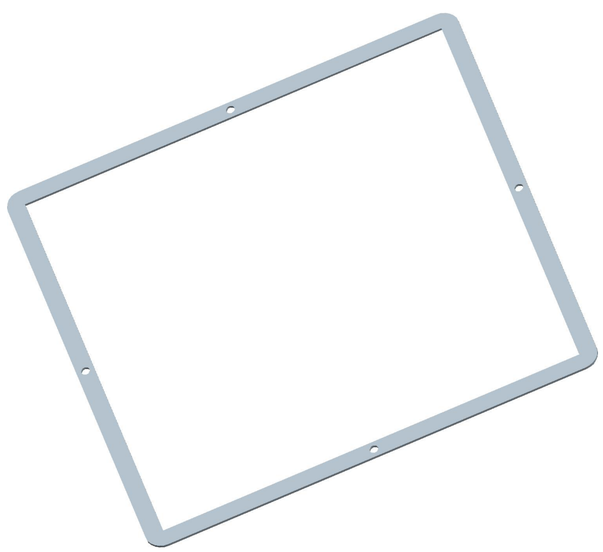

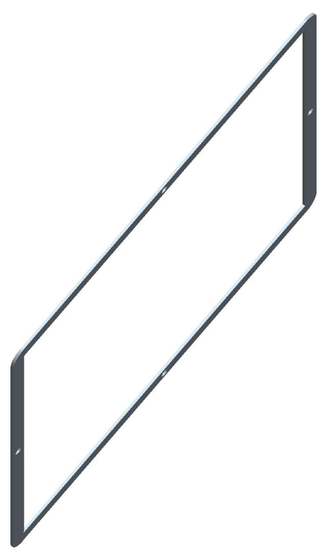

Tätä dokumenttia taikka sen osaa ei saa kopioida, uudelleenkäyttää taikka tallentaaNo part of this document may be reproduced or distributed in any form or by
missään muodossa eikä mihinkään tarkoitukseen, ilman kirallista lupaa omistajalta. any means, or stored in a data base, without the written permission of owner.

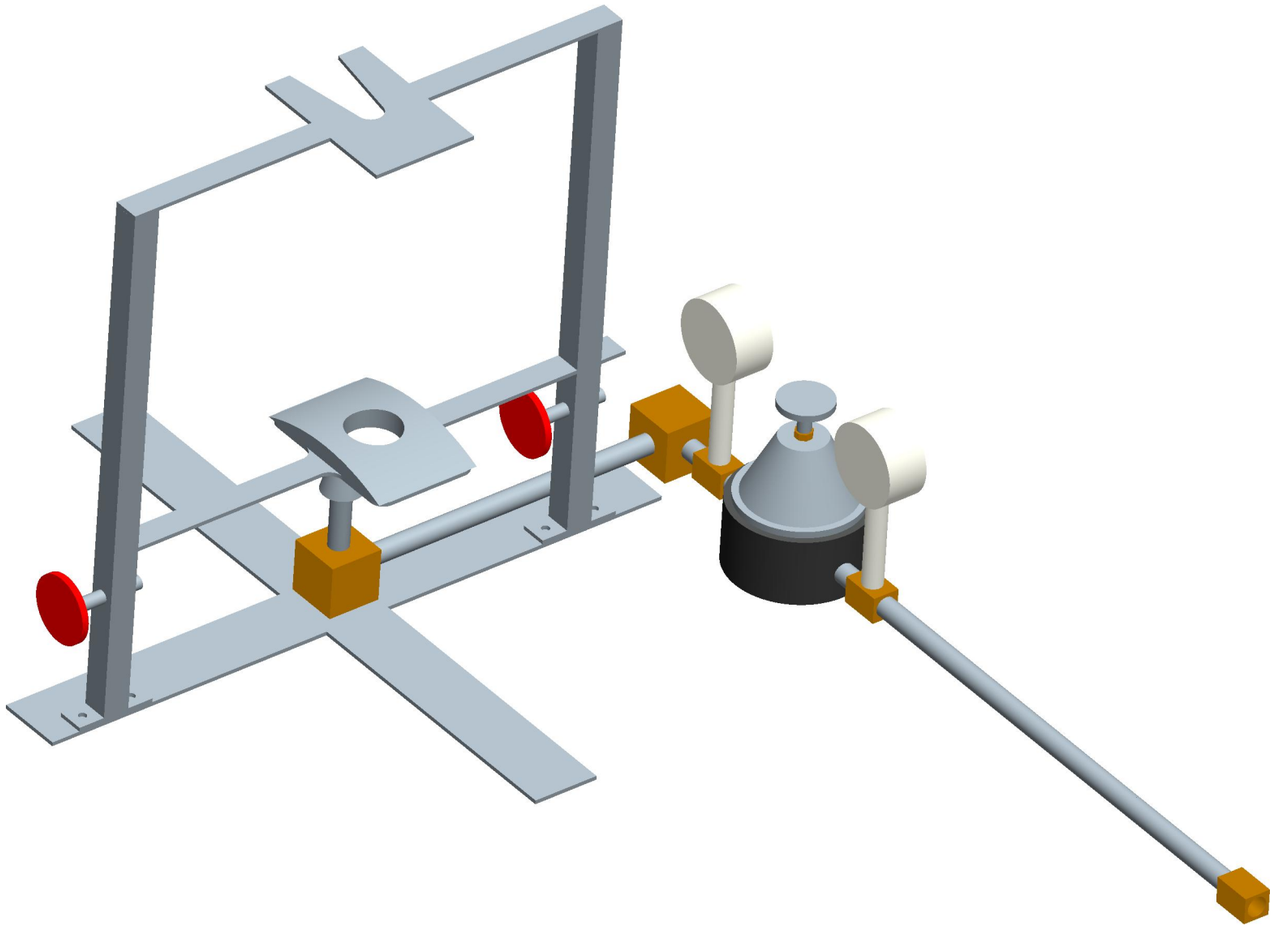

Revision:	Kuvaus: / Description:	Pvm: / Date:	Muuttaja: / By:

HAMK
University of Applied Sciences

Yleistoleranssit:
General tolerances:

Skaala:
Scale:
1:4

Tunnus:
Identific:

Nimitys:

Descript:

Suunnittelija / Pvm:
Designer / Date: James A Orivri -

Hyväksytty / Pvm:
Approved / Date: -

Tuote:
Product:

Korvaa:
Replays:

Kokonaismassa:
Total mass: 6399720.948 Kg

Materiaali:
Material:

Värisävy:
Color:

Pinta käs:
Treatment:

Pint. viimeist:
surf. finish:

Sivu numero:
Sheet nro: 1/1

Model filename: BASE_ASSEMBLY

Drawing filename: FIXTURE_ASM

Drawing file date: 21.02.2012

Tätä dokumenttia taikka sen osaa ei saa kopioida, uudelleenkäyttää taikka tallentaaNo part of this document may be reproduced or distributed in any form or by
missään muodossa eikä mihinkään tarkoitukseen, ilman kirallista lupaa omistajalta. any means, or stored in a data base, without the written permission of owner.

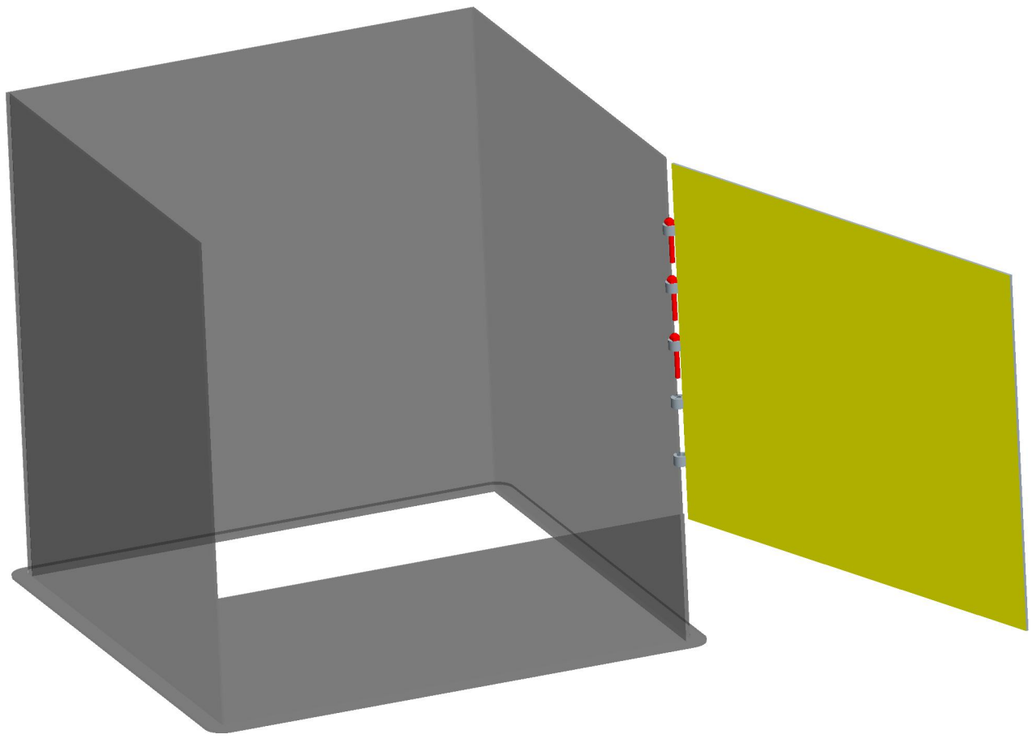

Revision:	Kuvaus: / Description:	Pvm: / Date:	Muuttaja: / By:

HAMK
University of Applied Sciences

Yleistoleranssit:
General tolerances:

Skaala:
Scale:
1:6

Tunnus:
Identific:

Nimitys:

Descript:

Suunnittelija / Pvm:
Designer / Date: James A Orivri -

Hyväksytty / Pvm:
Approved / Date: -

Tuote:
Product:

Korvaa:
Replays:

Kokonaismassa:
Total mass: 6399720.948 Kg

Materiaali:
Material:

Värisävy:
Color:

Pinta käs:
Treatment:

Pint. viimeist:
surf. finish:

Sivu numero:
Sheet nro: 1/1

Model filename: BASE_ASSEMBLY

Drawing filename: VVISIBILITY_FRAME_ASM

Drawing file date: 21.02.2012